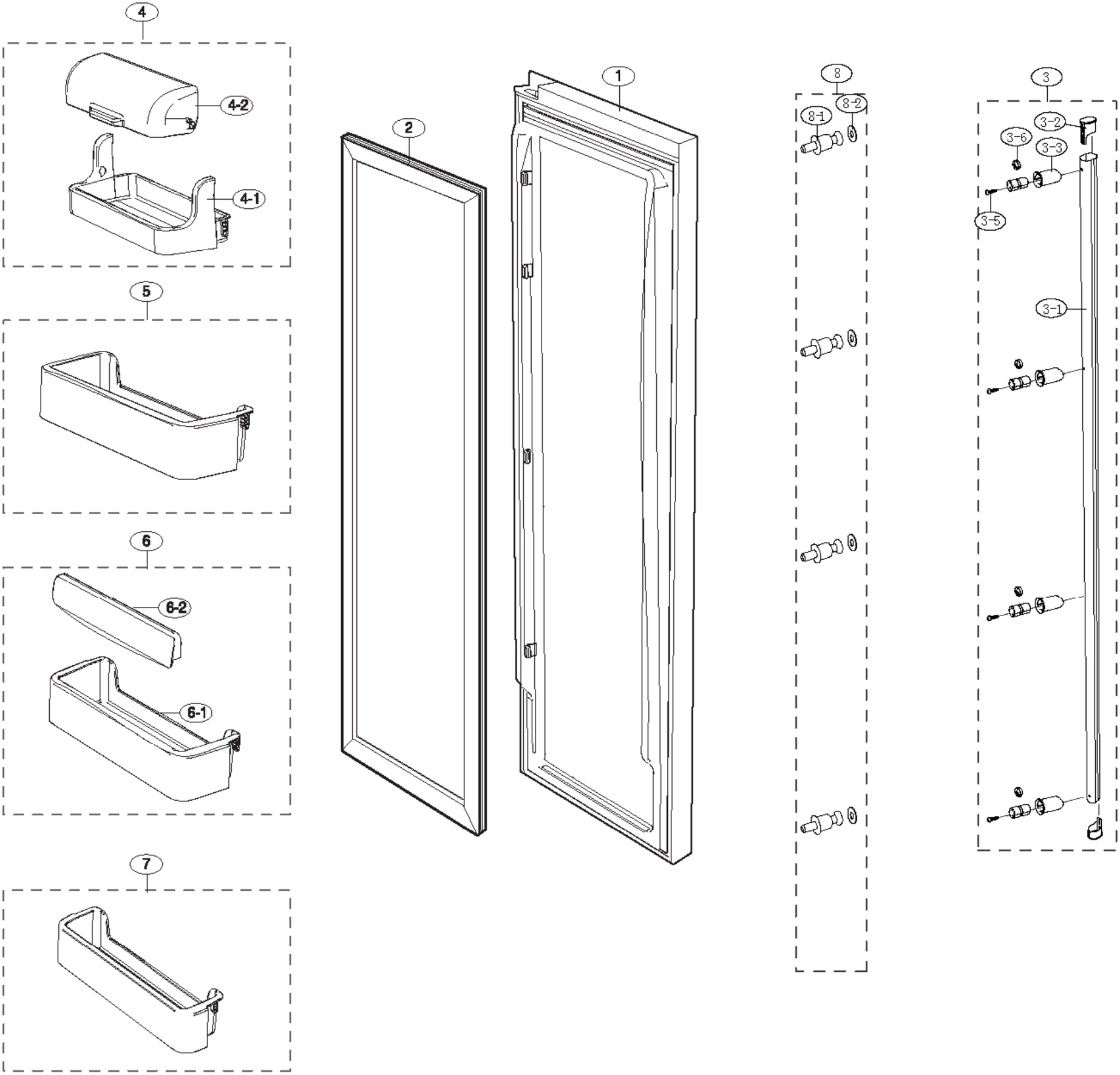
4
4-2
4-1
5
6
6-2
6-1
7
2
1
8
8-1
8-2
3
3-2
3-6
3-3
3-5
3-1

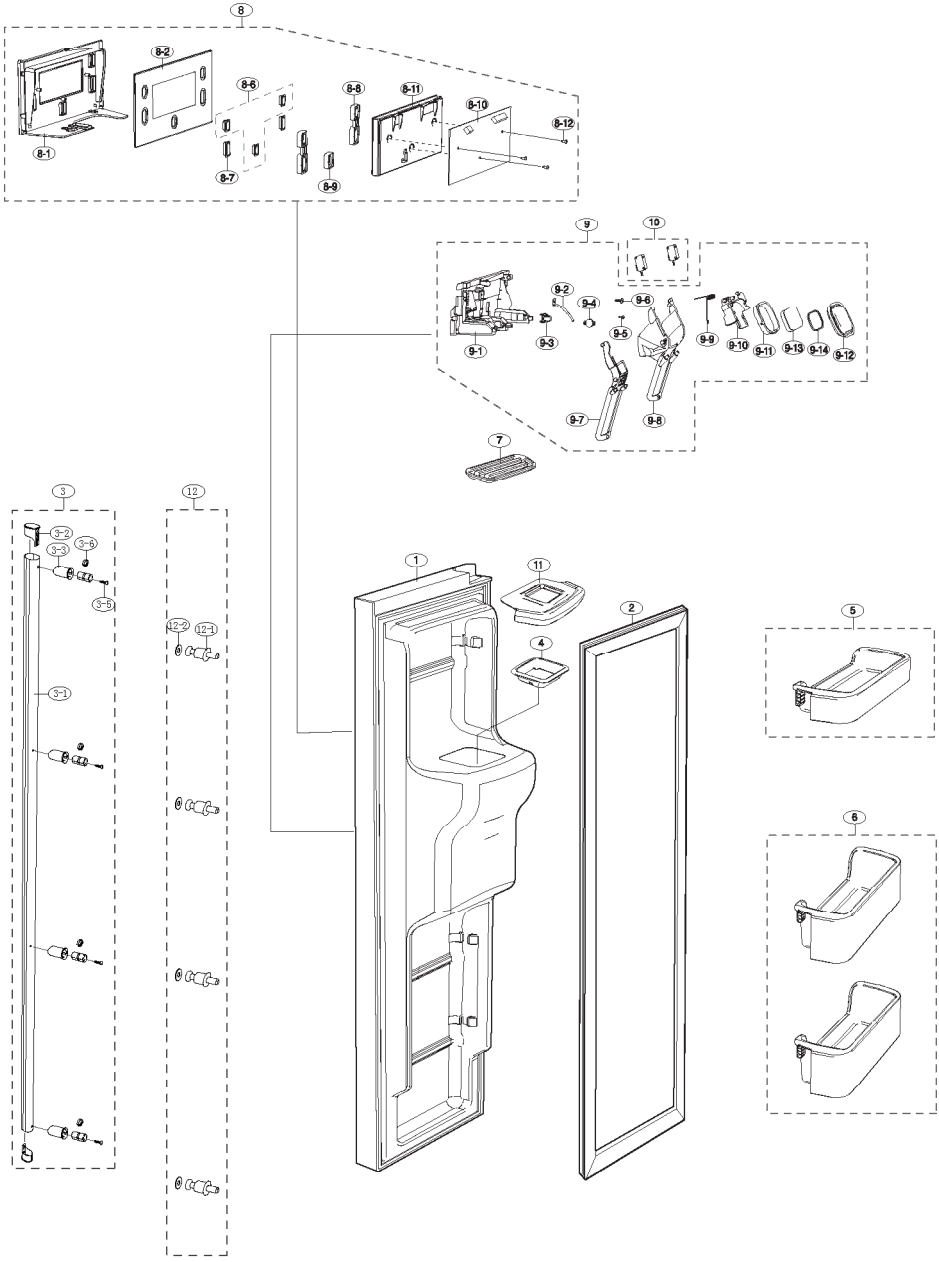
8
8-1
8-2
8-6
8-7
8-8
8-9
8-10
8-11
8-12
9
10
9-1
9-2
9-3
9-4
9-5
9-6
9-7
9-8
9-9
9-10
9-11
9-12
9-13
9-14
7
3
3-1
3-2
3-3
3-5
3-6
12
12-1
12-2
1
11
4
2
5
6

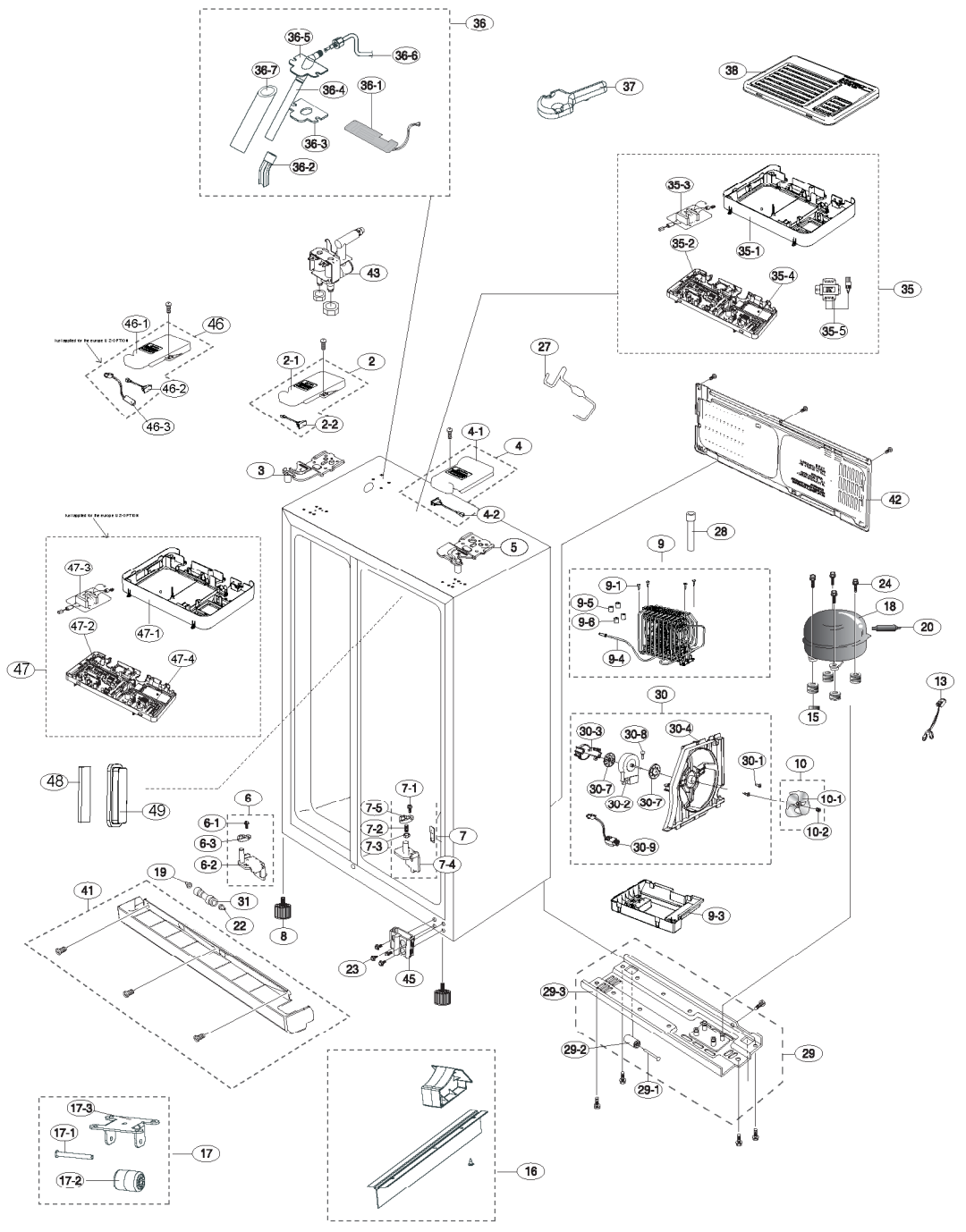
36
36-5
36-6
36-7
36-4
36-1
36-3
36-2
37
38
35-3
35-2
35-1
35-4
35-5
35
43
46-1
46
Not supplied for the model S-2-OPTION
46-2
46-3
2-1
2
2-2
27
4-1
4
4-2
3
5
42
28
9
9-1
9-5
9-6
9-4
24
18
20
13
15
Not supplied for the model S-2-OPTION
47-3
47-1
47-2
47-4
47
30
30-3
30-8
30-4
30-1
10
10-1
10-2
30-7
30-2
30-7
30-9
48
49
6
6-1
6-3
6-2
7-1
7-5
7-2
7-3
7
7-4
19
31
22
41
8
9-3
23
45
29-3
29-2
29-1
29
17-3
17-1
17
17-2
16

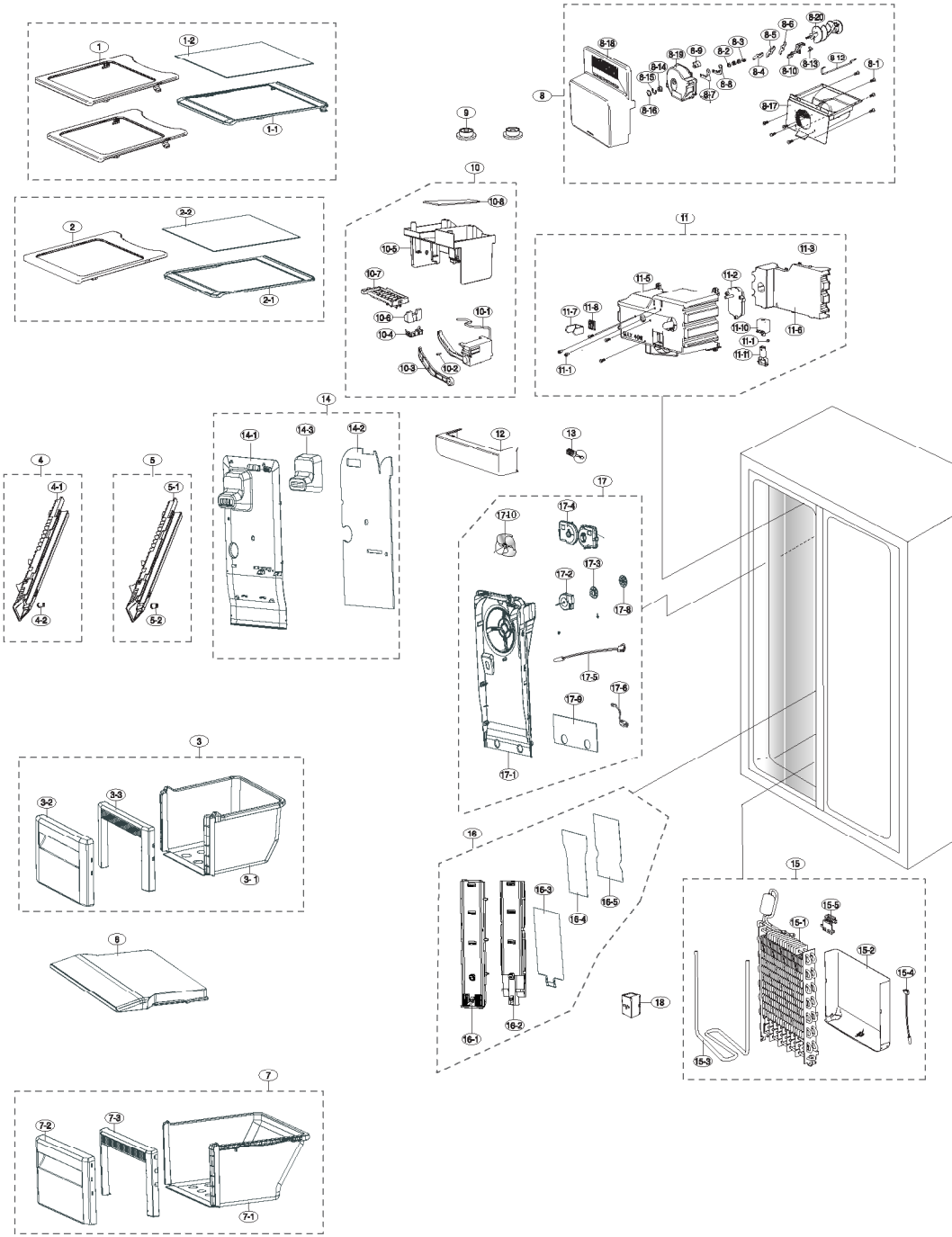
1
1-2
1-1
2
2-2
2-1
8
8-18
8-19
8-20
8-6
8-5
8-3
8-9
8-2
8-14
8-15
8-4
8-10
8-13
8-12
8-1
8-8
8-7
8-16
8-17
9
10
10-8
10-5
10-7
10-6
10-4
10-1
10-3
10-2
11
11-3
11-5
11-2
11-7
11-9
11-10
11-1
11-11
11-6
11-1
14
14-1
14-3
14-2
12
13
4
4-1
4-2
5
5-1
5-2
17
17-10
17-4
17-3
17-2
17-8
17-5
17-6
17-9
17-1
3
3-2
3-3
3-1
16
16-3
16-5
16-4
16-2
16-1
18
15
15-5
15-1
15-2
15-4
15-3
6
7
7-2
7-3
7-1

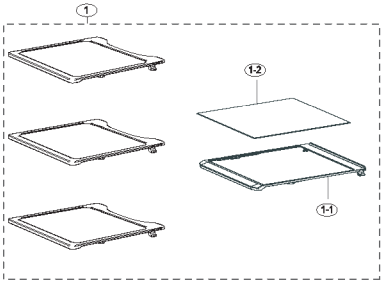
1
1-2
1-1

5
5-1
5-2

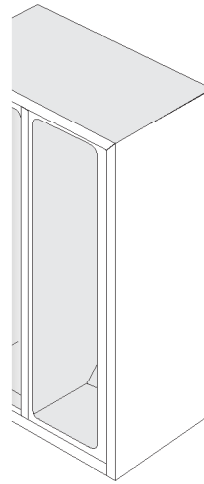

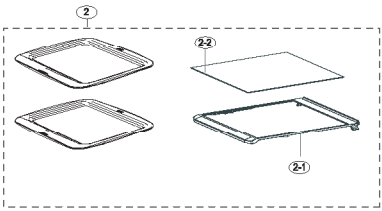
2
2-2
2-1

6
6-1
6-2

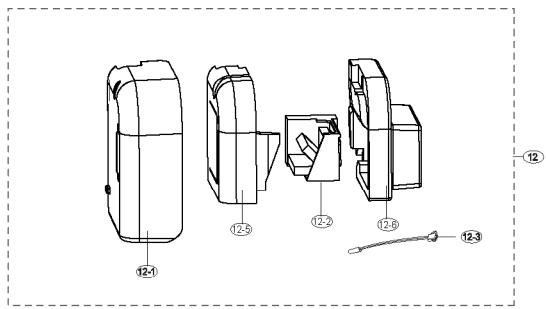
12
12-1
12-5
12-2
12-6
12-3

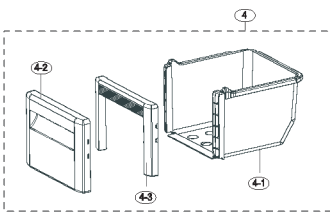
4
4-2
4-3
4-1

7

11

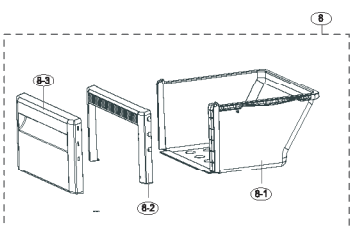
8
8-3
8-2
8-1

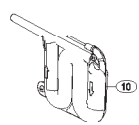
10